MODEL	DESCRIPTION
ELITE SERIES LVH500	EverHot Lead Free Hot Only Water Dispenser
	Shipping Wt: 10 lbs.
HOT ONLY	Includes faucet, EverHot tank, 3' cord, & tubing.
WITH LONG REACH SPOUT AND AIR GAP	
	Certified to NSF/ANSI Standard 61 and California Proposition 65.
FAUCET ONLY	Shipping Wt: 3 lbs.

Dimensions:
Height: 9-1/4"
Reach: 6-3/4"
Spout Diameter: 1/2"
Hole Size Required: 1-1/4"

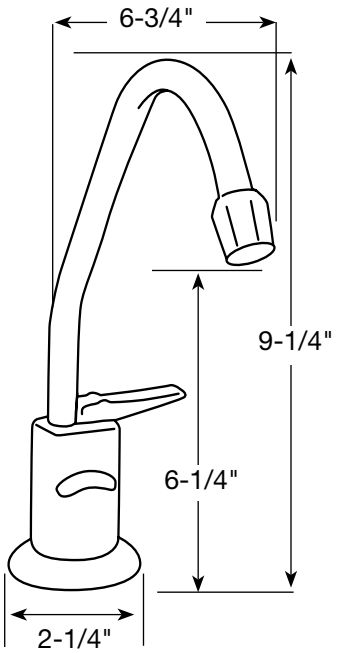

FAUCET & EVERHOT TANK FOR REVERSE OSMOSIS

FINISH	PART #	LIST PRICE
CHROME	WI-LVH500RH-CH	$615.95
COLOR		
BISCUIT	WI-LVH500RH-BS	$643.95
BLACK	WI-LVH500RH-BK	$643.95
WHITE	WI-LVH500RH-WH	$643.95
SPECIAL		
POLISHED NICKEL	WI-LVH500RH-PN	$671.95
SATIN CHROME	WI-LVH500RH-SC	$671.95
SATIN NICKEL	WI-LVH500RH-SN	$671.95
PREMIUM		
OIL RUBBED BRONZE	WI-LVH500RH-ORB	$709.95
POLISHED BRASS-**PVD**	WI-LVH500RH-PB	$709.95
STAINLESS STEEL	WI-LVH500RH-SS	$709.95

FAUCET ONLY FOR REVERSE OSMOSIS

FINISH	PART #	LIST PRICE
CHROME	WI-FA500RH-CH	$346.95
COLOR		
BISCUIT	WI-FA500RH-BS	$374.95
BLACK	WI-FA500RH-BK	$374.95
WHITE	WI-FA500RH-WH	$374.95
SPECIAL		
POLISHED NICKEL	WI-FA500RH-PN	$396.95
SATIN CHROME	WI-FA500RH-SC	$396.95
SATIN NICKEL	WI-FA500RH-SN	$396.95
PREMIUM		
OIL RUBBED BRONZE	WI-FA500RH-ORB	$471.95
POLISHED BRASS-**PVD**	WI-FA500RH-PB	$471.95
STAINLESS STEEL	WI-FA500RH-SS	$471.95

Please call for pricing on any Finish/Faucet combinations not listed.

UPGRADE SYSTEM TO A STAINLESS STEEL TANK FOR $100.

Add **-SS** to end of part number

NO-LEAD Compliant

Meets no lead standards for CA AB 1953 and VT Act 193.

The Everhot mark is used under license from Bradford White Corp.